# SHG AIRSHOW 2025 – YERLEŞİM PLANI/ LAYOUT PLAN

18.09.2025/REV4

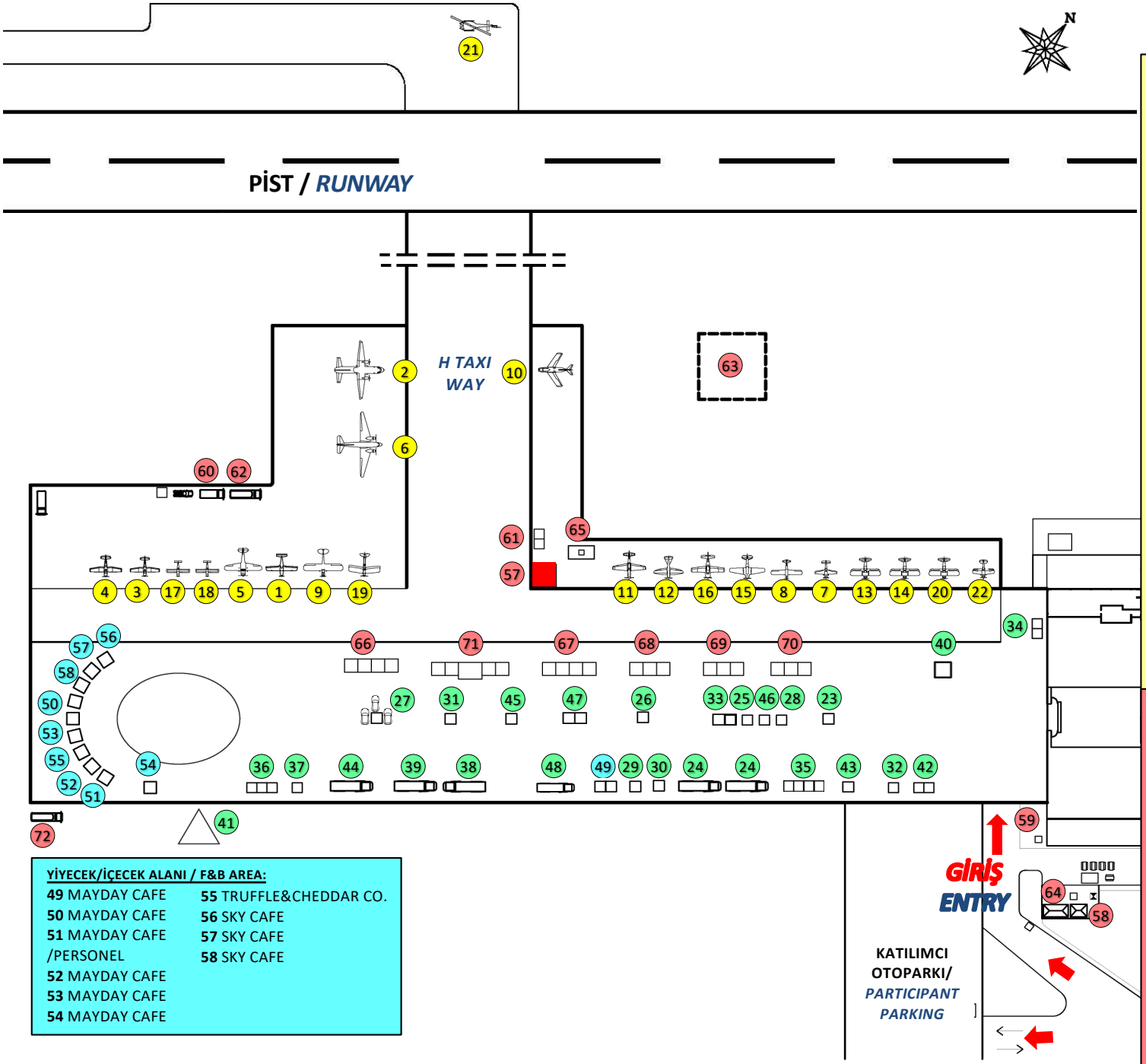


*(ALFABETİK SIRA İLE / BY ALPHABETICAL ORDER)*

**HAVA ARAÇLARI/ AIRCRAFTS**

**1** BRISTELL B23
**2** CASA CN - 235
**3** CESSNA 172
**4** CESSNA 185
**5** CESSNA 195
**6** DOUGLAS DC3 "TURKISH DELIGHT"
**7** EXTRA 330
**8** HUSKY A-1B
**9** PIPER CUB
**10** MiG-15BİS
**11** P-51D MUSTANG "FEROCIOUS FRANKIE"
**12** SPITFIRE
**13** STEARMAN A75N1
**14** STEARMAN A75N1
**15** T6G TEXAN "HARVARD"
**16** T28 TROJAN
**17** TECNAM P92 ECHO
**18** TECNAM P92 ECHO
**19** TIGER MOTH DH82
**20** VECİHİ XIV (14)
**21** UH-1H
**22** YENİ MENEKŞE

**SHOW ALANI / SHOW AREA**

**23** 401 TEST FİLO
**24** ACROMACH TIRI
**25** AEROPART / DYNON
**26** AKUT
**27** BİROLLAR
**28** ESKİŞEHİR TEKNİK ÜNİVERSİTESİ SİVİL HAVACILIK KULÜBÜ
**29** EMKA BOOTH
**30** GC SAVUNMA SANAYİ
**31** GORDİYON HAVACILIK
**32** HAVACI KADINLAR DERNEĞİ
**33** HOBBY TIME
**34** İMZA ÇADIRI
**35** M.S.Ö. AIR SPACE MUSEUM GIFT SHOP-1
**36** M.S.Ö. AIR SPACE MUSEUM GIFT SHOP-2
**37** PEDAL PLANE AREA
**38** POWER FM TIRI
**39** POWER FM SİMÜLATÖR
**40** RAF (ROYAL AIR FORCE)
**41** RED BULL
**42** SİVRİHİSAR HAVACILIK KULÜBÜ
**43** SULTAN SU
**44** ST-STORE
**45** TÜRK TELEKOM
**46** URAZ GİRİŞİM
**47** ÜLKÜM NAKIŞ
**48** YAKUT SAAT VE HAVACILIK

**YİYECEK/İÇECEK ALANI / F&B AREA:**

**49** MAYDAY CAFE
**50** MAYDAY CAFE
**51** MAYDAY CAFE /PERSONEL
**52** MAYDAY CAFE
**53** MAYDAY CAFE
**54** MAYDAY CAFE
**55** TRUFFLE&CHEDDAR CO.
**56** SKY CAFE
**57** SKY CAFE
**58** SKY CAFE

**ÖNEMLİ NOKTALAR/ KEY POINTS:**

**57** ARTAN KULE / ARTAN TOWER
**58** BEBEK BAKIM ODASI / BABY CARE ROOM
**59** DANIŞMA /INFORMATION (OCC ÖNÜ)
**60** DESTEK ARAÇLARI/TOWING CARS ("02"-"07"-"08")
**61** HAT EKİBİ / LINE CREW
**62** İTFAİYE EKİBİ / FIRE BRIGADE ("01"-"03"-"04")
**63** PARAŞÜT İNİŞ PANELİ/ PARA-LANDING SPOT
**64** REVİR-AMBULANS / MEDICAL
**65** SAHNE / STAGE
**66** SEYİRCİ ÇADIRLARI-1 / CROWD TENT-1
**67** SEYİRCİ ÇADIRLARI-2 / CROWD TENT-2
**68** SEYİRCİ ÇADIRLARI-3 / CROWD TENT-3
**69** SEYİRCİ ÇADIRLARI-4 / CROWD TENT-4
**70** SEYİRCİ ÇADIRLARI-5 / CROWD TENT-5
**71** TRİBÜN ALANI / STANDS
**72** VİNÇ/ RESCUE TEAM